COOL3R - 109580P81 - EVAP. GRUPO VAG. (TOUAREG, MULTIVAN) PORSCHE CAYENNE. (02-)

4L1820103 52421803 52431276 52496899 7H1820101C 7H1820101E 7H1820105 7L0819087AA 7L0819087K 7L0820102M 773289 52416219 7H1820105 7L0819087 EV939688PFC

PANAL: 245 x 260 x 74
full aluminium brazed.
parallel flow technology.
Inlet: 17,4
Outlet: 11,5

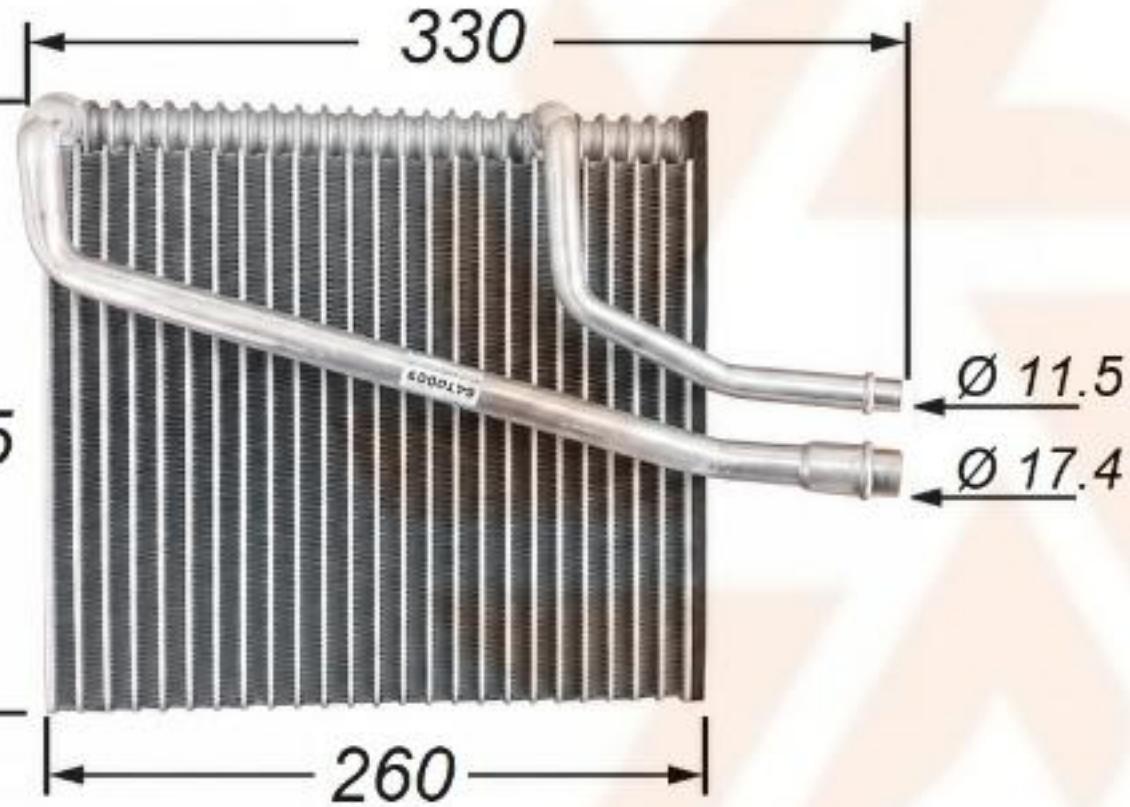
330
Ø 11.5
Ø 17.4
260


150

