COOL3R - 15154335 - CALEF. MITSUBISHI Pajero / Montero

MB898519 MB813485 MN188337

PANAL: 200 x 160 x 32
Metalico Completo

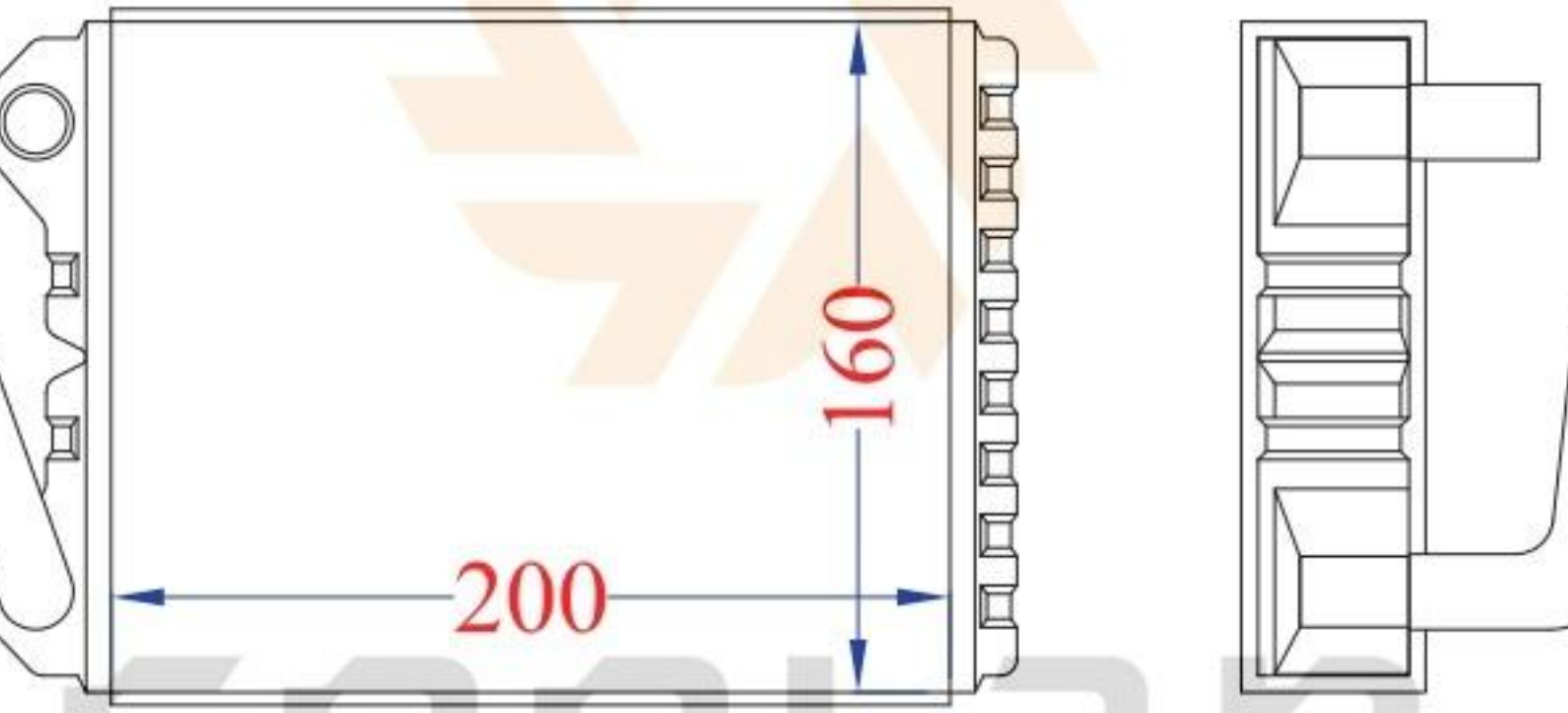

COOL3R
Radiators & Cooling Systems